Soft-Start Valves

Product Catalog

a global family

Soft-Start

The EEZ-ON® valve is designed to allow a gradual buildup of downstream air pressure before opening to full air flow.

2/2 Valves	3/2 Valves			
Internal Pressure Controlled	Solenoid Pilot Controlled		Internal Pressure Controlled	

Illustration examples.

This gradual pressure buildup allows cylinders and other work elements to move slowly and more safely into their normal working positions before full line pressure is applied.

The 3/2 valves have an exhaust port so that downstream air is exhausted when the valve is de-energized. At the same time, supply air is positively shut off so that a separate shut-off valve is not required.

VALVE FEATURES	
Poppet Design	Dirt tolerant, wear compensating for quick response and high flow capacity
Soft-Start Function	Gradual re-application of pneumatic pressure prevents rapid equipment movement at startup
Pressure Buildup Control	An adjustable restriction within the EEZ-ON® valve determines the rate of downstream pressure buildup, and consequently the time delay for the full opening of the EEZ-ON® valve
Quick Energy Dump	Full size exhaust ports (equal to or larger than supply) provide rapid exhaust of downstream air and are threaded for silencers or remote exhaust lines
Manual Override	Flush flexible, non-locking manual overrides are standard on single solenoid models

NOTE: Per specifications and regulations, these products are defined as energy isolation devices, NOT AS EMERGENCY STOP DEVICES.

© 2025, ROSS®. All Rights Reserved.

Specifications

STANDARD SPECIFICATIONS

GENERAL	Function		2/2 Valve	Normally Closed
			3/2 Valve	
	Construction Design		Poppet	
	Actuation		Electrical	Solenoid Pilot Controlled
			Pneumatic	Pressure Controlled
	Mounting	Type	Inline	
		Orientation	Any, preferably vertical	
	Connection		Threaded Port	NPT
				G
	Minimum Operation Frequency		Once per month, to ensure proper function	
	Manual Override (Solenoid Pilot Controlled valves)		Flush; rubber, non-locking	

OPERATING CONDITIONS	Temperature	Solenoid Pilot Controlled	Ambient	40° to 120°F (4° to 50°C)
			Media	40° to 175°F (4° to 80°C)
		Internal Pressure Controlled	Ambient	40° to 175°F (4° to 80°C)
			Media	
	Flow Media		Filtered air	
	Operating Pressure		15 to 150 psig (1 to 10 bar)	
	Pilot Supply Pressure		Internal	Must meet minimum operating pressure
			External	Must be equal to or greater than inlet pressure, and meet minimum operating pressure

ELECTRICAL DATA FOR SOLENOID PILOT VALVES	Solenoids	Current Flow	Operating Voltage	Power Consumption (each solenoid)
		DC	24 volts	14 watts
		AC	110-120 volts, 50/60 Hz	87 VA inrush, 30 VA holding
			230 volts, 50/60 Hz	
		Rated for continuous duty		

CONSTRUCTION MATERIAL	Valve Body	Cast Aluminum
	Poppet	Acetal and Stainless Steel
	Seals	Buna-N

SAFETY DATA	Safety Integrity Level (SIL)	Certified by TÜV Rheinland in accordance to IEC 61508 and IEC 61511 safety integrity level 2 (SIL 2) and EN ISO 13849-1, PL c (with application specific diagnosis) in singular application with HFT = 0 and SIL 3 and PL e in redundant application with HFT≥1, for details see certificate.

IMPORTANT NOTE: Please read carefully and thoroughly all of the **CAUTIONS, WARNINGS** on the inside back cover.

PRODUCT CREDENTIALS

Performance Level	Safety Integrity Level	Declaration of Conformity	Certificate of Compliance
Per ISO 13849-1:2015	Per IEC 2061:2001		
Cat. 1 PL c	SIL 2 Functional Safety	EAC	C US Solenoid Pilot Valves

Ordering Information

INTERNAL PRESSURE CONTROLLED — 2-Way 2-Position Valves

Body Size	Port Size	Valve Model Number	
	In-Out	NPT Thread	G Thread
3/8	1/4	2781A2007	D2781A2007
	3/8	2781A3007	D2781A3007
	1/2	2781A4017	D2781A4017
3/4	1/2	2781A4007	D2781A4007
	3/4	2781A5007	D2781A5007
	1	2781A6017	D2781A6017
1-1/4	1	2781A6007	D2781A6007
	1-1/4	2781A7007	D2781A7007
	1-1/2	2781A8017	D2781A8017

Size		Flow Cv (Nl/min)	Weight ≈ lb (kg)
Body	Port 1, 2	1-2	
3/8	1/4	1.8 (1800)	1.5 (0.7)
	3/8	3.2 (3100)	
	1/2	3.9 (3800)	
3/4	1/2	7.2 (7100)	2.3 (1.0)
	3/4	9.1 (9000)	
	1	9.9 (9700)	
1-1/4	1	21 (21000)	6.0 (2.7)
	1-1/4	30 (31000)	
	1-1/2	32 (31000)	

Valve Schematic

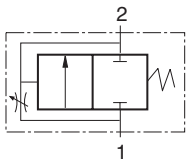

© 2025, ROSS®. All Rights Reserved.

SOLENOID PILOT CONTROLLED — 3-Way 2-Position Valves

Body Size	Port Size		Valve Model Number					
	In-Out	Exhaust	NPT Thread			G Thread		
			24 V DC	110-120 V AC	230 V AC	24 V DC	110-120 V AC	230 V AC
3/8	1/4	1/2	2773B2037W	2773B2037Z	2773B2037Y	D2773B2037W	D2773B2037Z	D2773B2037Y
	3/8	1/2	2773B3037W	2773B3037Z	2773B3037Y	D2773B3037W	D2773B3037Z	D2773B3037Y
	1/2	1/2	2773B4047W	2773B4047Z	2773B4047Y	D2773B4047W	D2773B4047Z	D2773B4047Y
3/4	1/2	1	2773B4037W	2773B4037Z	2773B4037Y	D2773B4037W	D2773B4037Z	D2773B4037Y
	3/4	1	2773B5037W	2773B5037Z	2773B5037Y	D2773B5037W	D2773B5037Z	D2773B5037Y
	1	1	2773B6047W	2773B6047Z	2773B6047Y	D2773B6047W	D2773B6047Z	D2773B6047Y
1-1/4	1	1-1/2	2773A6037W	2773A6037Z	2773A6037Y	D2773A6037W	D2773A6037Z	D2773A6037Y
	1-1/4	1-1/2	2773A7037W	2773A7037Z	2773A7037Y	D2773A7037W	D2773A7037Z	D2773A7037Y
	1-1/2	1-1/2	2773A8047W	2773A8047Z	2773A8047Y	D2773A8047W	D2773A8047Z	D2773A8047Y

For other voltages, consult ROSS.

Size			Flow Cv (Nl/min)		Weight ≈ lb (kg)
Body	Port 1, 2	Port 3	1-2	2-3	
3/8	1/4	1/2	1.9 (1900)	3.3 (3200)	4.5 (2.0)
	3/8	1/2	2.9 (2800)	4.4 (4300)	
	1/2	1/2	3.8 (3800)	5.0 (4900)	
3/4	1/2	1	6.2 (6100)	9.4 (9300)	5.0 (2.3)
	3/4	1	8.2 (8100)	10 (9800)	
	1	1	9.1 (9000)	12 (12000)	
1-1/4	1	1-1/2	21 (21000)	27 (27000)	8.8 (4.0)
	1-1/4	1-1/2	29 (29000)	29 (29000)	
	1-1/2	1-1/2	30 (30000)	30 (30000)	

Valve Schematic

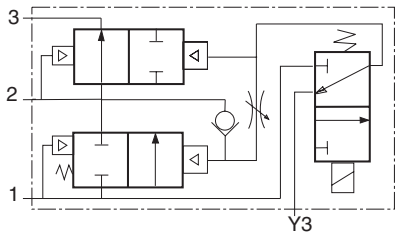

Ordering Information

INTERNAL PRESSURE CONTROLLED — 3-Way 2-Position Valves

Body Size	Port Size		Valve Model Number	
	In-Out	Exhaust	NPT Thread	G Thread
3/8	1/4	1/2	2783C2037	D2783C2037
	3/8	1/2	2783C3037	D2783C3037
	1/2	1/2	2783C4047	D2783C4047
3/4	1/2	1	2783C4037	D2783C4037
	3/4	1	2783C5037	D2783C5037
	1	1	2783C6047	D2783C6047
1-1/4	1	1-1/2	2783B6037	D2783B6037
	1-1/4	1-1/2	2783B7037	D2783B7037
	1-1/2	1-1/2	2783B8047	D2783B8047

Size			Flow Cv (NI/min)		Weight ≈ lb (kg)
Body	Port 1, 2	Port 3	1-2	2-3	
3/8	1/4	1/2	1.9 (1900)	3.3 (3200)	4.5 (2.0)
	3/8	1/2	2.9 (2800)	4.4 (4300)	
	1/2	1/2	3.8 (3800)	5.0 (4900)	
3/4	1/2	1	6.2 (6100)	9.4 (9300)	5.0 (2.3)
	3/4	1	8.2 (8100)	10 (9800)	
	1	1	9.1 (9000)	12 (1200)	
1-1/4	1	1-1/2	21 (2100)	27 (27000)	8.8 (4.0)
	1-1/4	1-1/2	29 (29000)	29 (29000)	
	1-1/2	1-1/2	30 (30000)	30 (30000)	

Valve Schematic

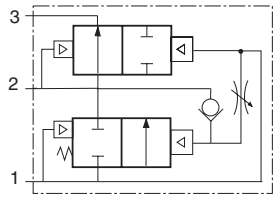

© 2025, ROSS®. All Rights Reserved.

Solenoid Pilot Controlled Valves

Pilot Not Energized

Pilot air is blocked by the pilot. Any downstream pressure forces piston B (which slides on the valve stem) upward. This opens the exhaust port and vents the downstream line.

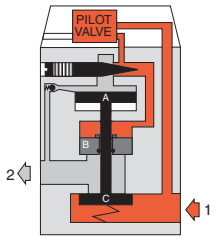

Pilot Energized

Pilot air forces piston B downward to close the exhaust port. Pilot air also flows past the adjusting needle, opens the ball check and begins slowly to pressurize the outlet line. At the same time, pressure is building up on piston A.

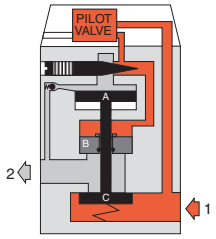

Full Pressure

When the pressure on piston A reaches approximately 50 percent of inlet pressure, it is forced downward and opens inlet poppet C. Full inlet pressure now flows freely to the outlet port.

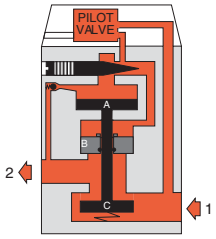

Pilot De-energized

Air above pistons A and B is exhausted through the exhaust port of the pilot valve. Air above poppet C forces sliding piston B upward so that the main exhaust port is opened and the pressurized air is exhausted.

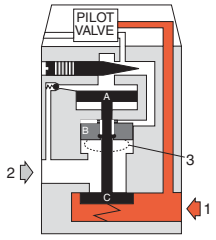

Internal Pressure Controlled Valves

Air Pressure to Inlet

When air pressure is first applied to the inlet, air flow to the piston is restricted by the adjustable needle in the delay orifice. Downstream air pressure gradually builds up at a rate determined by the setting of the adjustable needle.

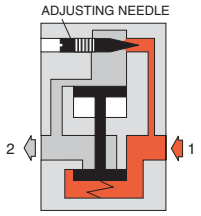

Inlet Pressure Removed

When inlet pressure is removed, the exhausting downstream air pressure keeps the inlet poppet open until the downstream pressure drops by approximately 90 percent. The remaining pressure is exhausted via the delay orifice.

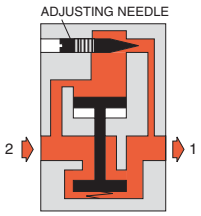

Valve Opens to Full Flow

When downstream air pressure reaches approximately 40 to 60 percent of inlet pressure, the valve element shifts to the full open position and there is full air flow to the downstream components. This condition continues as long as inlet air pressure is present.

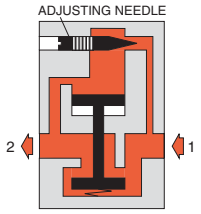

© 2025, ROSS®. All Rights Reserved.

2/2 Pressure Controlled Valves

DIMENSIONS — Inches (mm)

Body Size 3/8

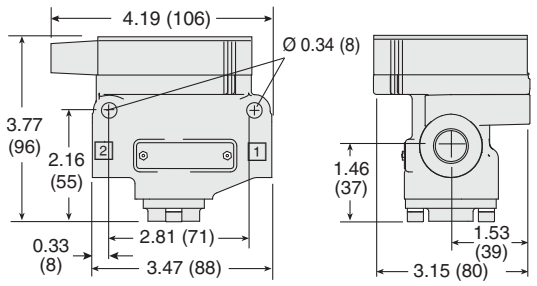

Body Size 3/4

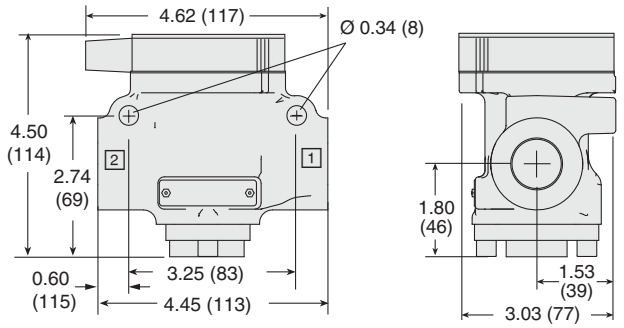

Body Size 1-1/4

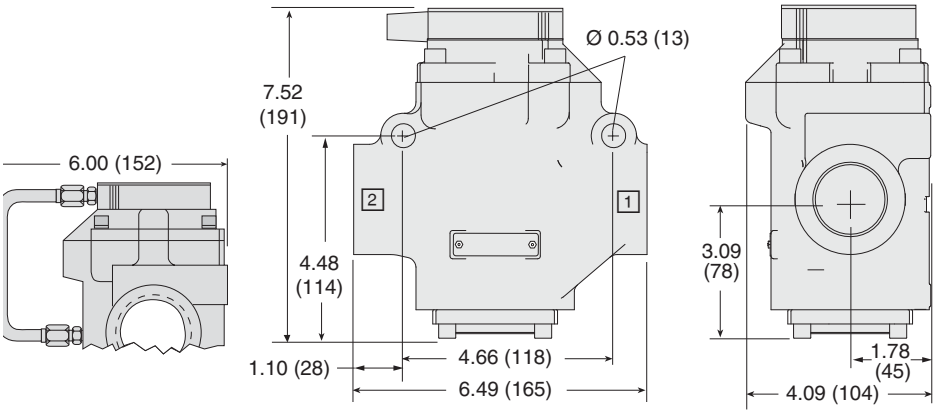

Downloadable CAD models available.

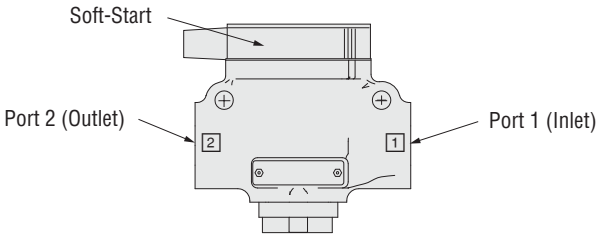

3/2 Solenoid Pilot Controlled Valves

DIMENSIONS — Inches (mm)

Body Size 3/8

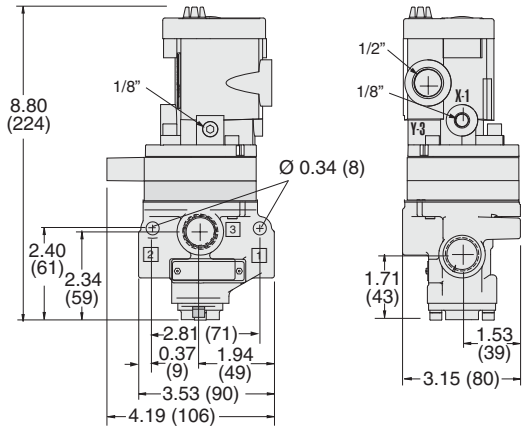

Body Size 3/4

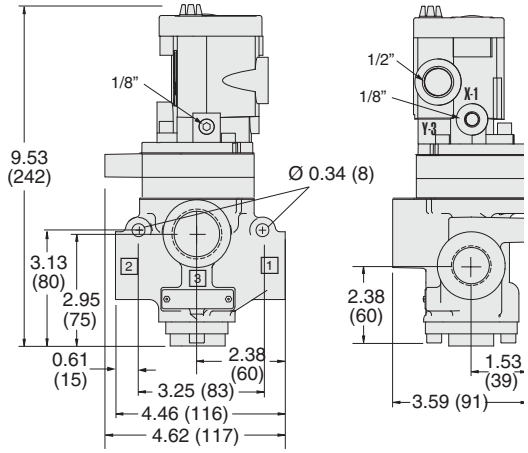

Body Size 1-1/4

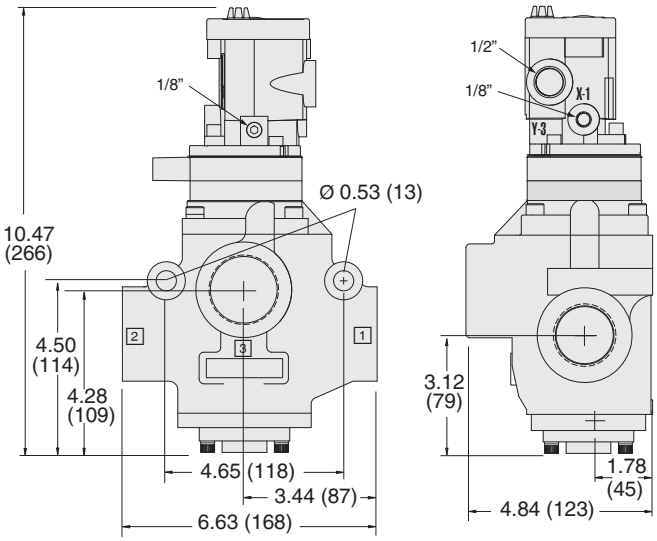

Downloadable CAD models available.

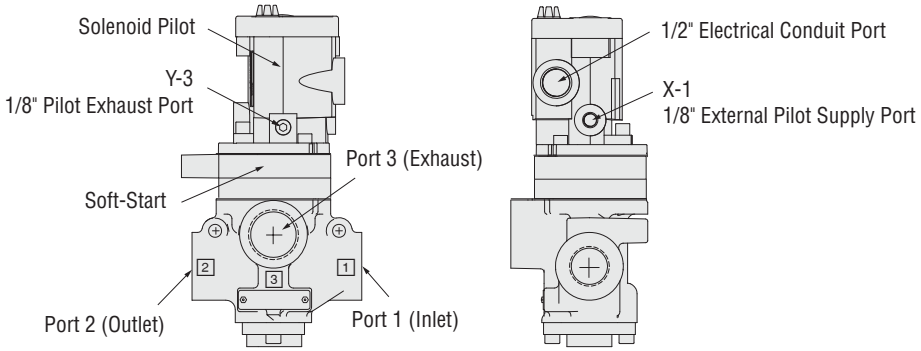

© 2025, ROSS®. All Rights Reserved.

3/2 Pressure Controlled Valves

DIMENSIONS — Inches (mm)

Body Size 3/8

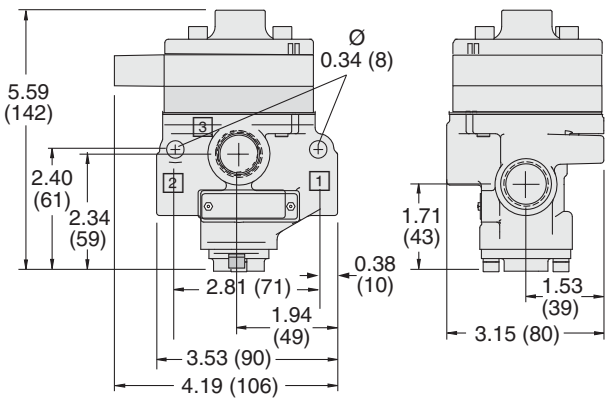

Body Size 3/4

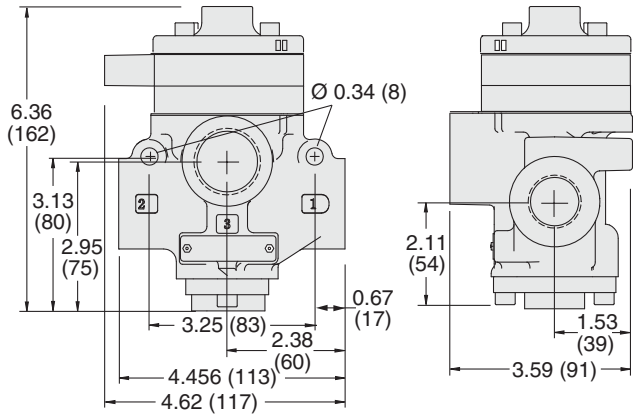

Body Size 1-1/4

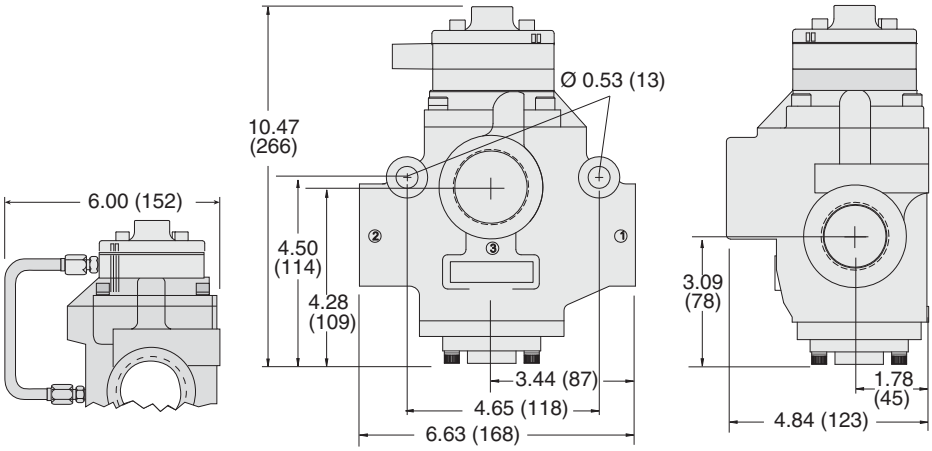

Downloadable CAD models available.

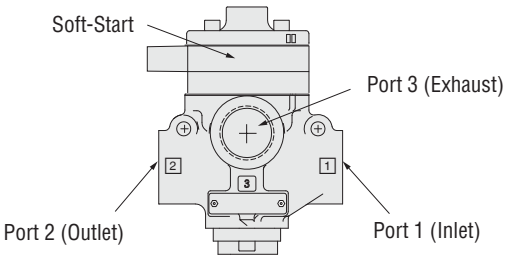

ENERGY RELEASE VERIFICATION

Illustration example.

Pressure Switch	Verification Type	Installation Location	Connector Type	Model Number	Port Thread	Factory Preset psi (bar)
	Electrical	Downstream	DIN EN 175301-803 Form A	586A86	1/8 NPT	5 (0.3) falling

Pinout

DIN EN 175301-803 Form A

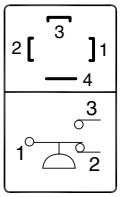

1 - Common
2 - Normally Closed
3 - Normally Open
4 - Ground (Not Used)

© 2025, ROSS®. All Rights Reserved.

EXHAUST SILENCERS

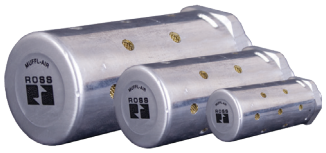

Illustration example.

Silencers

SPECIFICATIONS	Silencer Material	Pressure Range psig (bar)	Schematic
	Aluminum	0-290 (0-20) maximum	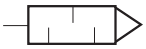

Port Size	Thread Type	Flow C_V (Nl/min)	Model Number		Dimensions inches (mm)		Weight ≈ lb (kg)
			NPT Thread	R/Rp Thread	Length	Hex Size (D)	
1/2	Male	6.8 (6700)	5500A4003	D5500A4003	3.6 (9)	1.25 (32)	0.2 (0.1)
1	Male	18 (18000)	5500A6003	D5500A6003	5.4 (14)	2.0 (51)	0.9 (0.4)
1-1/2	Female	39 (38000)	5500A8001	D5500A8001	5.7 (14)	2.5 (64)	1.3 (0.6)

FEMALE SILENCER CONNECTORS

Hex Nipples

Material	Fitting Pipe Size	Thread Type	Model Number		
			NPT Thread	BSPT Thread	
Steel	1-1/2	Male - Male	488J27	122J39	

SOLENOID PILOT INDICATOR LIGHT KITS

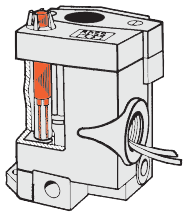

Illustration example.

	Kit Number		
	24 V DC	**110-120 V AC, 50-60 Hz**	**230 V AC, 50-60 Hz**
Indicator Light Kits	862K87-W	862K87-Z	862K87-Y
	To visually verify valve operation, indicator light kits are available for single solenoid models. Indicator lights are standard on double solenoid valves. The indicator light is illuminated when the solenoid is energized.		

SOLENOID PILOT MANUAL OVERRIDE KITS

Flush Button	Extended Button	Extended Button with Palm

Illustration examples.

	Manual Override Type	Kit Number	
		Locking Type	**Non-Locking Type**
Manual Override Kits	Flush Button	792K87	–
	Extended Button	–	791K87
	Extended Button with Palm	–	984H87
	Flush rubber button, non-locking manual override is standard on solenoid models. Each of the buttons in the override kits is made of metal and is spring-returned. The locking type button, however, can be kept in the actuated position by turning the slot in the top of the button with a screwdriver.		

© 2025, ROSS®. All Rights Reserved.

CAUTIONS, WARNINGS And STANDARD WARRANTY

ROSS OPERATING VALVE, ROSS CONTROLS®, ROSS DECCO®, and AUTOMATIC VALVE INDUSTRIAL, collectively the "ROSS Group".

PRE-INSTALLATION or SERVICE

1. Before servicing a valve or other pneumatic component, be sure all sources of energy are turned off, the entire pneumatic system is shut down and exhausted, and all power sources are locked out (ref: OSHA 1910.147, EN 1037).

2. All ROSS Group Products, including service kits and parts, should be installed and/or serviced only by persons having training and experience with pneumatic equipment. Because any product can be tampered with and/or need servicing after installation, persons responsible for the safety of others or the care of equipment must check ROSS Group Products on a regular basis and perform all necessary maintenance to ensure safe operating conditions.

3. All applicable instructions should be read and complied with before using any fluid power system to prevent harm to persons or equipment. In addition, overhauled or serviced valves must be functionally tested prior to installation and use. If you have any questions, call your nearest ROSS Group location.

4. Each ROSS Group Product should be used within its specification limits. In addition, use only ROSS Group components to repair ROSS Group Products.

WARNINGS:
Failure to follow these instructions can result in personal injury and/or property damage.

FILTRATION and LUBRICATION

1. Dirt, scale, moisture, etc., are present in virtually every air system. Although some valves are more tolerant of these contaminants than others, best performance will be realized if a filter is installed to clean the air supply, thus preventing contaminants from interfering with the proper performance of the equipment. The ROSS Group recommends a filter with a 5-micron rating for normal applications.

2. All standard ROSS Group filters and lubricators with polycarbonate plastic bowls are designed for compressed air applications only. Use the metal bowl guard, where provided, to minimize danger from high pressure fragmentation in the event of bowl failure. Do not expose these products to certain fluids, such as alcohol or liquefied petroleum gas, as they can cause bowls to rupture, creating a combustible condition and hazardous leakage. Immediately replace crazed, cracked, or deteriorated bowls.

3. Only use lubricants which are compatible with materials used in the valves and other components in the system. Normally, compatible lubricants are petroleum base oils with oxidation inhibitors, an aniline point between 180°F (82°C) and 220°F (104°C), and an ISO 32, or lighter, viscosity. Avoid oils with phosphate type additives which can harm polyurethane components, potentially leading to valve failure which risks personal injury, and/or damage to property.

WARNINGS:
Failure to follow these instructions can result in personal injury and/or property damage.

AVOID INTAKE/EXHAUST RESTRICTION

1. Do not restrict air flow in the supply line. To do so could reduce the pressure of the supply air below minimum requirements for the valve and thereby causing erratic action.

2. Do not restrict a valve's exhaust port as this can adversely affect its operation. Exhaust silencers must be resistant to clogging and must have flow capacities at least as great as the exhaust capacities of the valves. Contamination of the silencer can result in reduced flow and increased back pressure.

WARNINGS: ***Failure to follow these instructions can result in personal injury and/or property damage.***

SAFETY APPLICATIONS

1. Mechanical Power Presses and other potentially hazardous machinery using a pneumatically controlled clutch and brake mechanism must use a press control double valve with a monitoring device. A double valve without a self-contained monitoring device should be used only in conjunction with a control system which assures monitoring of the valve. All double valve installations involving hazardous applications should incorporate a monitoring system which inhibits further operation of the valve and machine in the event of a failure within the valve mechanism.

2. Safe Exhaust (dump) valves without a self-contained monitoring device should be used only in conjunction with a control system which assures monitoring of the valve. All Safe Exhaust valve installations should incorporate a monitoring system which inhibits further operation of the valve and machine in the event of a failure within the valve mechanism.

3. Per specifications and regulations, the ROSS L-O-X® and L-O-X® with EEZ-ON®, N06 and N16 Series operation products are defined as energy isolation devices, NOT AS EMERGENCY STOP DEVICES.

WARNINGS:
Failure to follow these instructions can result in personal injury and/or property damage.

STANDARD WARRANTY

All products sold by the ROSS Group are warranted for a one-year period [with the exception of Filters, Regulators and Lubricators ("FRLs") which are warranted for a period of seven (7) years] from the date of purchase. All products are, during their respective warranty periods, warranted to be free of defects in material and workmanship. The ROSS Group's obligation under this warranty is limited to repair, replacement or refund of the purchase price paid for products which the ROSS Group has determined, in its sole discretion, are defective. All warranties become void if a product has been subject to misuse, misapplication, improper maintenance, modification or tampering. Products for which warranty protection is sought must be returned to the ROSS Group freight prepaid.

THE WARRANTY EXPRESSED ABOVE IS IN LIEU OF AND EXCLUSIVE OF ALL OTHER WARRANTIES AND THE ROSS GROUP EXPRESSLY DISCLAIMS ALL OTHER WARRANTIES EITHER EXPRESSED OR IMPLIED WITH RESPECT TO MERCHANTABILITY OR FITNESS FOR A PARTICULAR PURPOSE. THE ROSS GROUP MAKES NO WARRANTY WITH RESPECT TO ITS PRODUCTS MEETING THE PROVISIONS OF ANY GOVERNMENTAL OCCUPATIONAL SAFETY AND/OR HEALTH LAWS OR REGULATIONS. IN NO EVENT IS THE ROSS GROUP LIABLE TO PURCHASER, USER, THEIR EMPLOYEES OR OTHERS FOR INCIDENTAL OR CONSEQUENTIAL DAMAGES WHICH MAY RESULT FROM A BREACH OF THE WARRANTY DESCRIBED ABOVE OR THE USE OR MISUSE OF THE PRODUCTS. NO STATEMENT OF ANY REPRESENTATIVE OR EMPLOYEE OF THE ROSS GROUP MAY EXTEND THE LIABILITY OF THE ROSS GROUP AS SET FORTH HEREIN.

950 Woodward Heights, Ferndale, Michigan 48220 US

Global Locations

Americas	USA	**ROSS** CONTROLS	Tel: +1-248-764-1800	www.rosscontrols.com
	Canada	**ROSS** CANADA	Tel: +1-416-251-7677	www.rosscanada.com
	Brazil	**ROSS** BRASIL	Tel: +55-11-4335-2200	www.rosscontrols.com.br
Europe	Germany	**ROSS** EUROPA	Tel: +49 (0)6103-7597-100	www.rosseuropa.com
	France	**ROSS** FRANCE	Tel: +33-(0)1-49-45-65-65	www.rossfrance.com
	United Kingdom	**ROSS** UK	Tel: +44 (0)1254 872277	www.rossuk.co.uk
Asia & Pacific	India	**ROSS** CONTROLS INDIA	Tel: +91-44-2624-9040	www.rosscontrolsindia.com
	China	**ROSS** CONTROLS CHINA	Tel: +86-21-6915-7961	www.rosscontrolschina.com
	Japan	**ROSS** ASIA	Tel: +81-42-778-7251	www.rossasia.co.jp

www.automaticvalve.com	www.rossdecco.com	www.manufactis.net	www.masterpneumatic.com	www.pneumatrol.com	www.ubsafe.com

© 2025, ROSS®, All Rights Reserved.